BURGUNDY 3



KMC
GLASS

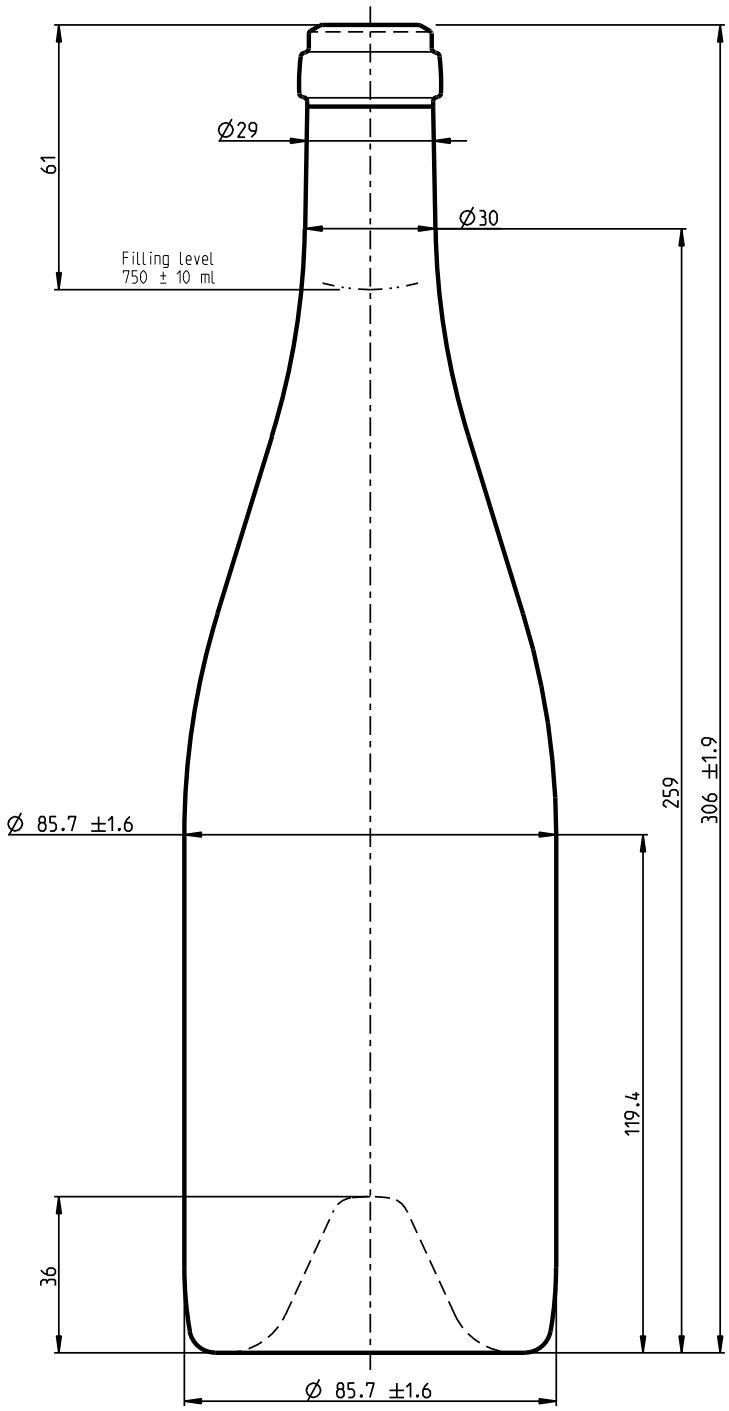

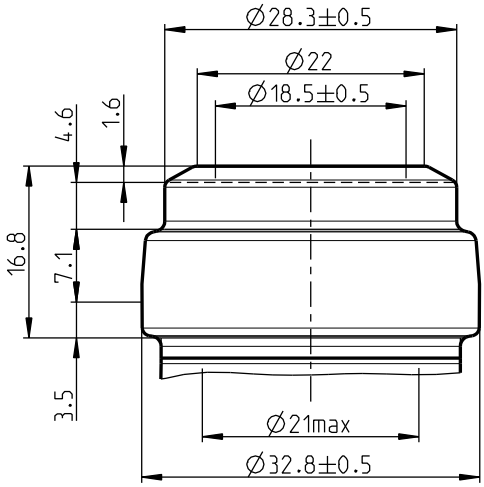

- Burgundy 3
- Weight - 810 g
- Filling CAP - 750 ml
- Color - Olive Green
- Diameter - 85.7 ± 1.6
- Entrance bore diameter - 18.5

www.kmc.glass
sales@kmc.glass

KMC GLASS